产品规格书
SPECIFICATION

产品型号Model.　P/N NO.：K-S3 10 11 PC XXXX X

送样日期(Date Landed)：

厂商　Manufacturer		客户确认（品质部） Customer Confirmation (Quality Dep.)		客户确认（技术部） Customer Confirmation (Technology Dep.)	
制作： Drafter	Heng Rui Liu	☐ 接受(accept)		☐ 接受(accept)	
		☐ 不接受(Reject)		☐ 不接受(Reject)	
审核： Checked	Heng Rui Liu	审核： Checked		审核： Checked	
核准： Approved	Jian Qiang Liu	核准： Approved		核准： Approved	

FINAL
پارت سازان

地址Add：深圳市宝安区沙井街道锦程路新联河工业园四栋 No.4Building,XinLianHe Industry Park,JinChengRoad,Shajing Town,Baoan District,Shenzhen,Guangdong,China；　电话 Tel：0755-21910112　传真Fax：0755-27916693

1.产品编号说明 Product Code Description

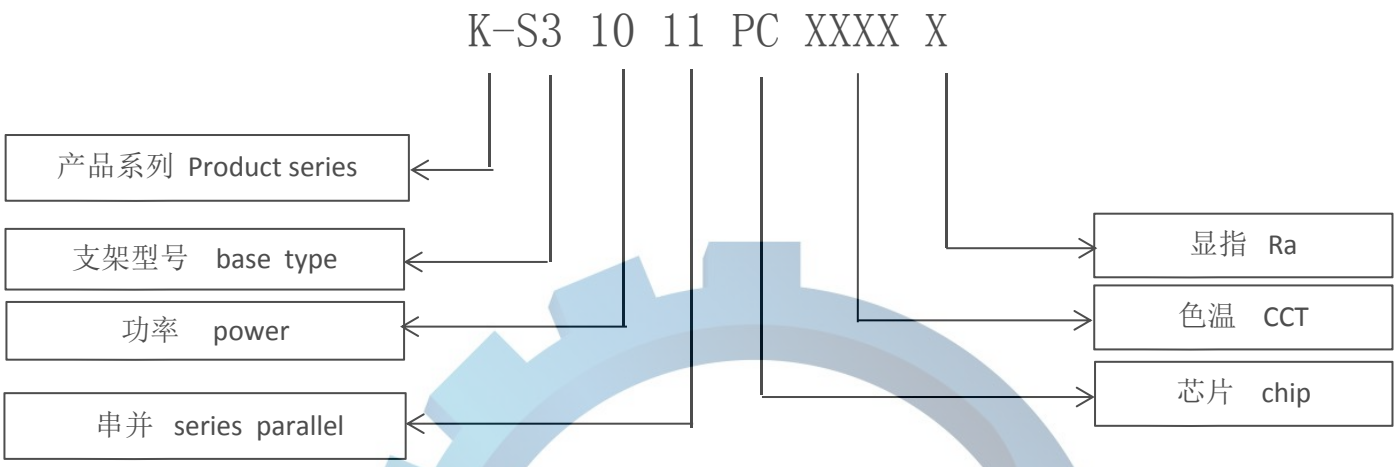

2. 应用 Application

此规格书只适用于型号（仿流明 1W 3V 正白光）的大功率 发光二极管模组。

This specification applies only to models of high power led only（ K2 1W 3V Pure White Led）LED .

2.1 特点 Feature

●高光效,超长光通量维持率,达到LM-80标准. High luminous efficiency,High luminous flux maintenance, LM-80 standard approved

●外观尺寸 Package Dimension：14.5mm×8.0mm×5.1mm

●发光角度 Viewing Angle：120-140°

●符合ROHS标准 RoHS Approved

● 常规PC透镜只能手工焊接 Normal PC lens is suitable for manual welding

● 高温透镜适合回流焊焊接 High-temperature lens is suitable for reflow soldering

2.2主要用途Main application：照明 Lighting

FINAL
پارت سازان

2. 外部尺寸和等效电路 Demension and Circuit

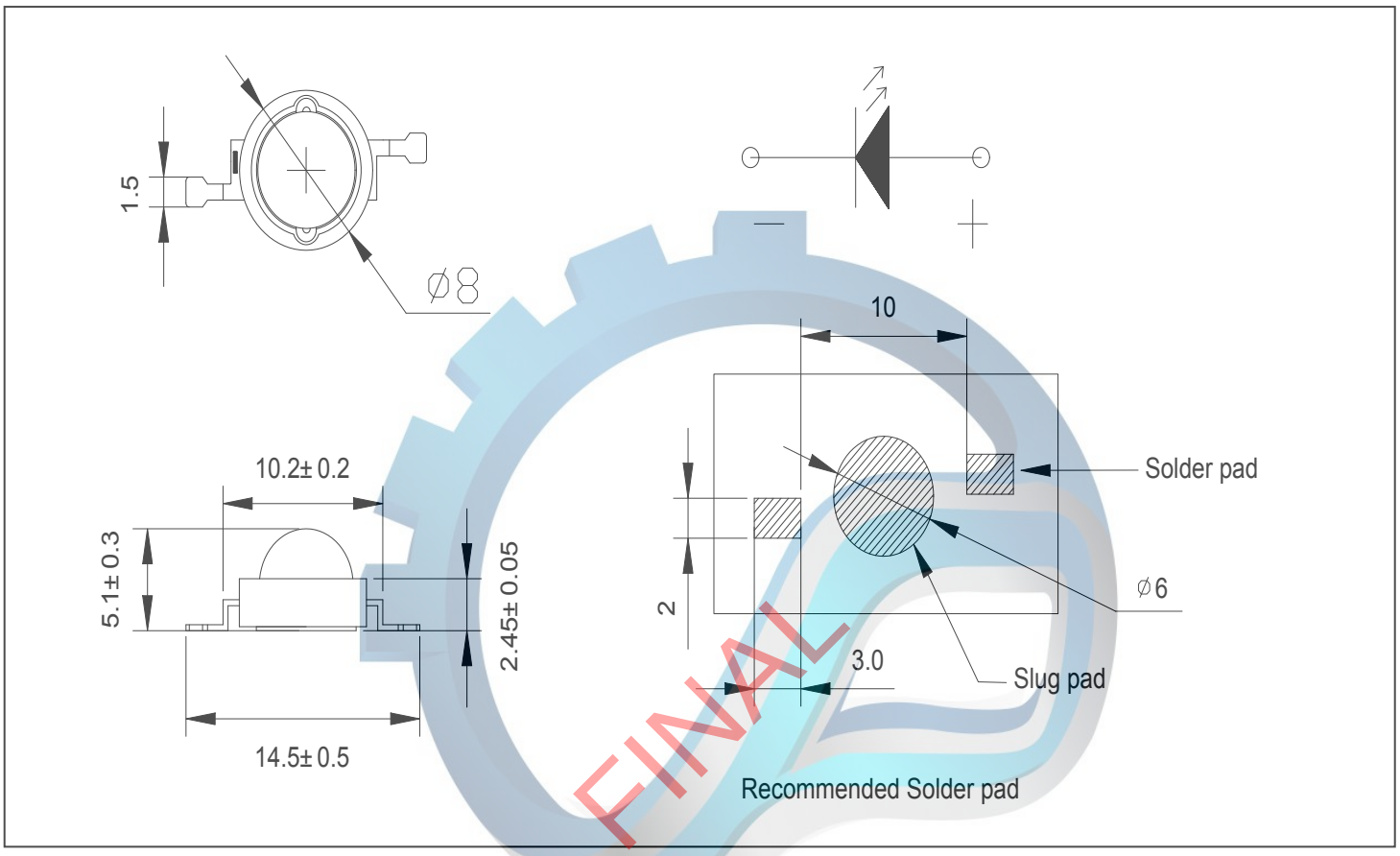

单位Unit：mm 所有未标注公差为Tolerance：+-0.2mm 底板材质Base material:铜copper

3. 级别和特性Characteristics：

3-1. 绝对最大等级 Absolute Maximum Ratings

项目 Item	符号 Symbol	数值Value	单位 Unit
极限功率 *1 limiting power	P	1.20	W
正向直流电流*1 DC Forward Current	If	350	mA
反向直流电压*1Reverse Voltage	Vr	<-5	V
反向直流电流 Reverse Current	Ir	<10	uA
结温*3 Junction Temperature	Tj	<120	℃
工作温度Operating Temperature	T_{OPR}	-30~+105	℃
储藏温度Storage Temperature	T_{STG}	-35~+100	℃
静电承受极限Electrostatic Limit	ESD	2000 HBM	V
引线焊接温度Soldering Temperature	T_{SLD}	205℃/3-5S	℃/S
湿度敏感级别 Moisture Sensitivity Rating	MSR	MSL3	℃/RH/H

FINAL

补充说明 Additional Remarks

1.极限功率和正向电流 是指模块温度通过使用合适的散热体下的最大设置数值。

Max power and positive current mean the maximum setting value of the bottom temperature of led light source by using the appropriate heat sink.

2.最初连接错误的反向电压，超出将可能损坏模组。Connection error and off-limits voltage may damage LED chip.

3-3.光电特征Optical Characteristics：

Part Number	Nominal CCT (K)	Power T j = 25ºC (W)	Nominal Current (mA)	Voltage T j = 25ºC (V)	Pulsed Flux T j = 25ºC (lm)	Ra	Efficacy T j = 25ºC (lm/W)
KS31011PC017E*N	1700K 1900K	1.2	350	3.0-3.4	110-120	/	90-100
KS31011PC020E*N	2000K 2200K	1.2	350	3.0-3.4	120-130	/	100-110
KS31011PC025E*N	2500K 2700K	1.2	350	3.0-3.4	140-150	/	120-130
KS31011PC030E*7	3000K 3200K	1.2	350	3.0-3.4	130-140	70	110-120
KS31011PC040E*7	4000K 4300K	1.2	350	3.0-3.4	140-150	70	120-130
KS31011PC050E*7	5000K 5500K	1.2	350	3.0-3.4	140-150	70	120-130
KS31011PC060E*7	6000K 6500K	1.2	350	3.0-3.4	140-150	70	120-130
KS31011PC030E*8	3000K 3200K	1.2	350	3.0-3.4	120-130	80	100-110
KS31011PC040E*8	4000K 4300K	1.2	350	3.0-3.4	130-140	80	110-120
KS31011PC050E*8	5000K 5500K	1.2	350	3.0-3.4	130-140	80	110-120
KS31011PC060E*8	6000K 6500K	1.2	350	3.0-3.4	130-140	80	110-120

FINAL

注意Attention：

1.测试环境温度25 ℃,若使用不同电流或不同的环境温度测试，会引起波长及电压的变化。

Testing environment temperature25 ℃,and Domi Wavelength and voltage will changed if tested in different current and environment temperature.

2.不同标准测试仪正常测试允许公差：电压±0.1V，流明±10% ,波长±2,色坐标±0.005。

Tolerance among different testing machine: Voltage:±0.1V, Lumen±10%, Wavelength±2nm, Color coordinate ±0.005.

3-4.色容差产品色域分布SDCM Color Area：

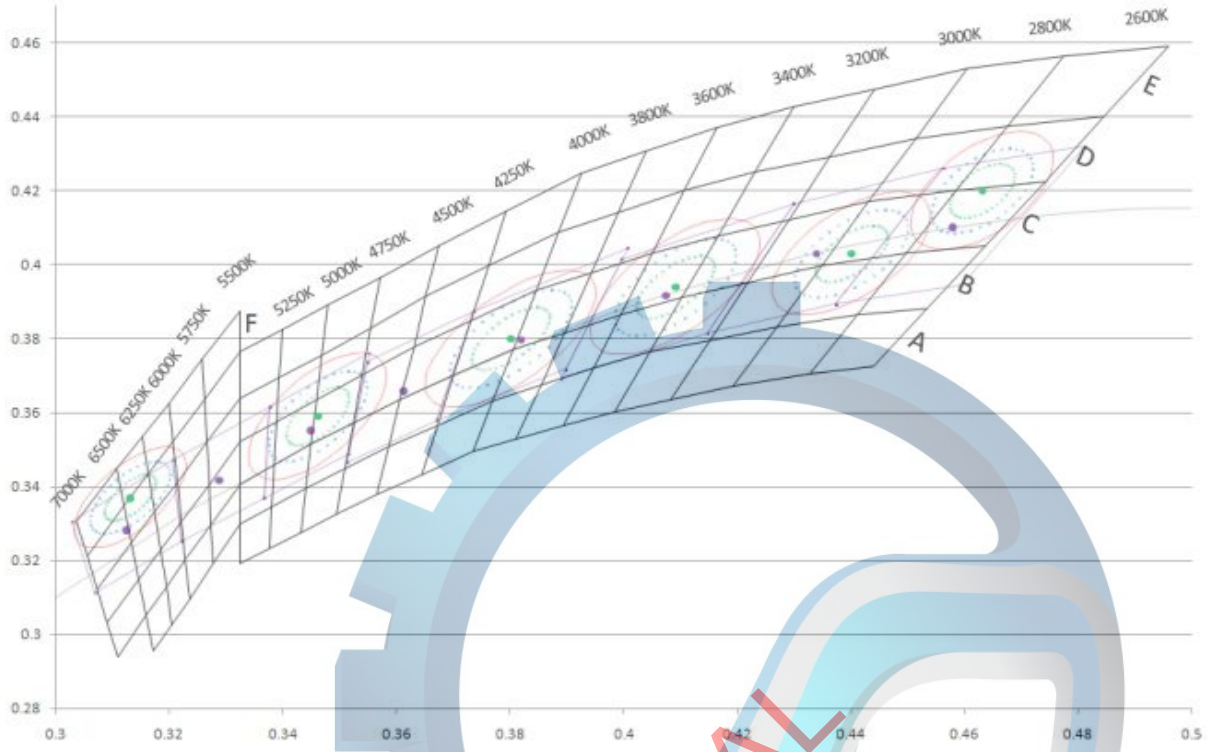

中心色温	2725K	3045K	3560K	3985K	4550K	5028K	5665K	5990K	6530K
X	0.4578	0.4338	0.4082	0.3818	0.3607	0.3447	0.329	0.3202	0.3123
Y	0.4101	0.403	0.3918	0.3797	0.3675	0.3553	0.3417	0.3385	0.3282

1.电压分档标准：0.2V/档，没有要求则按0.4V/档；光通量分档标准：10LM/档
Voltage sub-standard: 0.2V / file, no requirement by 0.4V / file; luminous flux sub-standard: 10LM / file.

2.色域可控制在色温中心坐标的4-6阶麦克亚当椭圆之内，色温分bin参考ANSI C78.377-2008。

Color area can be controled within 4-6 SDCM.Bin of color temperature refers to ANSI C78.377-2008.

3.非色容差产品的中心点不在以上色域范围，不做标识。
Special CCT and the center point is not in above color gamut range, do not identify.

4.整灯要求色容差≤3SDCM产品,可根据需要按色容差分光方式分BIN,通过交叉SMT方式达到相关要求，具体咨询相关技术人员。
The whole light fixture requirements color tolerance ≤ 3SDCM , according to the needs of color difference by way of sub-BIN, through the cross-SMT way to meet the relevant requirements, the specific consultation with the relevant technical staff.

3-5.特性图表(TYP) Characteristics Diagram(TYP)

3-5.1相对光谱分布曲线图
Relative Spectral Distribution Graph:

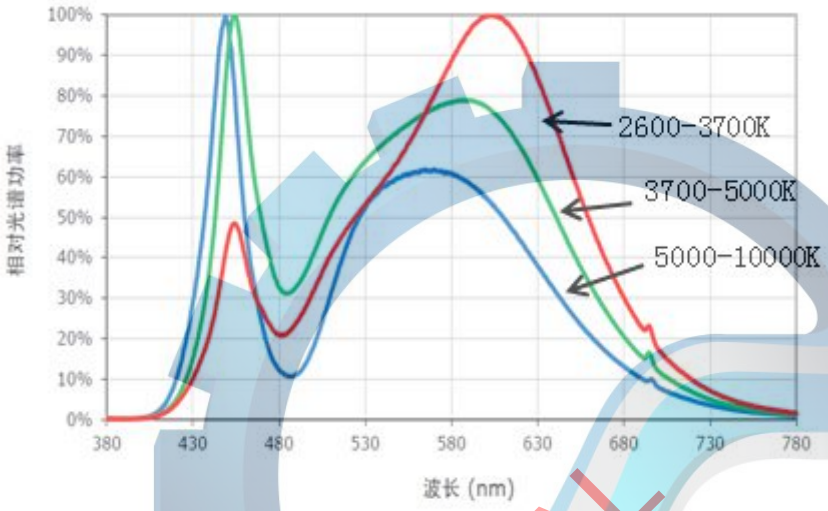

3-5.2角度分布图
Radiation Angle Distribution Graph：

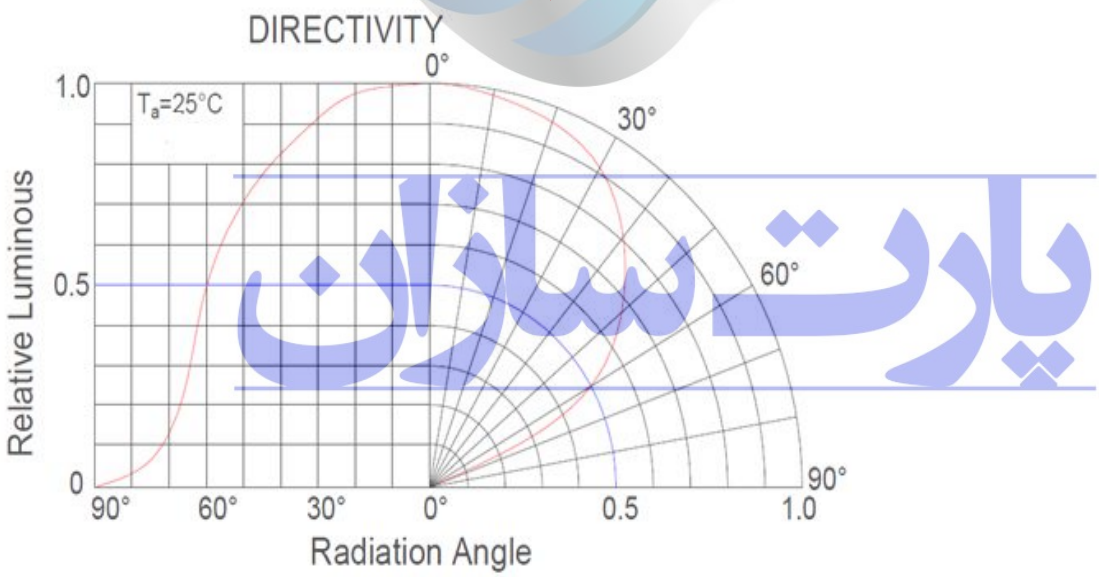

FINAL
پارت سازان

3-5.3其他相关曲线图 Other optical Curves

（1）. Relative Luminous Intensity VS Forward Current
亮度与电流关系曲线图

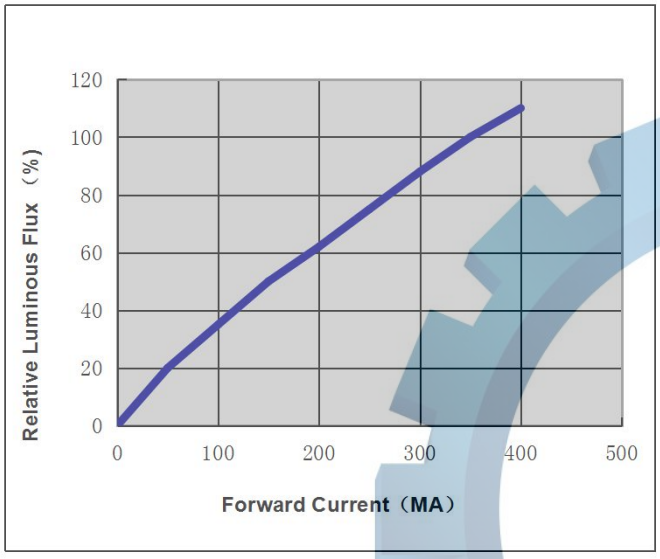

（2）. Forward Current VS Forward Voltage
电流与电压关系曲线图

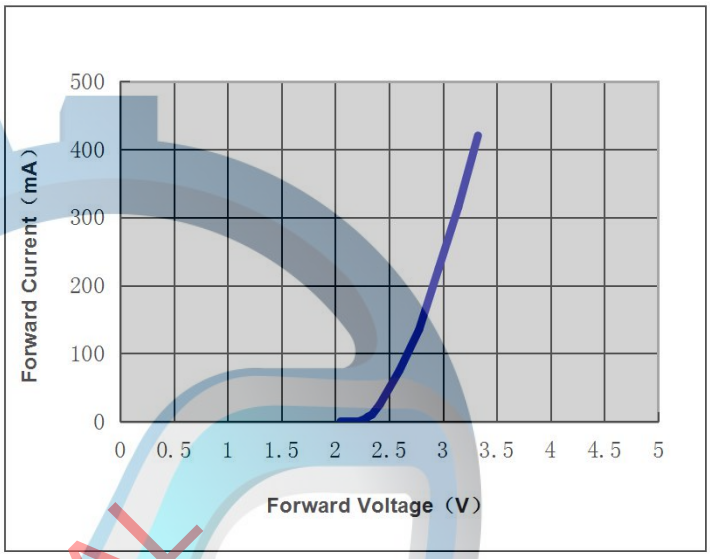

（3）. Relative Luminous Intensity VSJunction Temperature亮度与结温关系曲线图

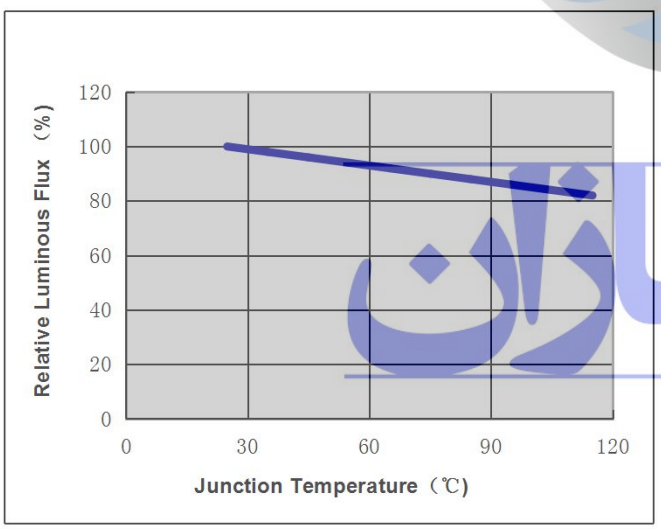

（4）. Forward Current VS Soldering Temperature
电流与温度关系曲线图

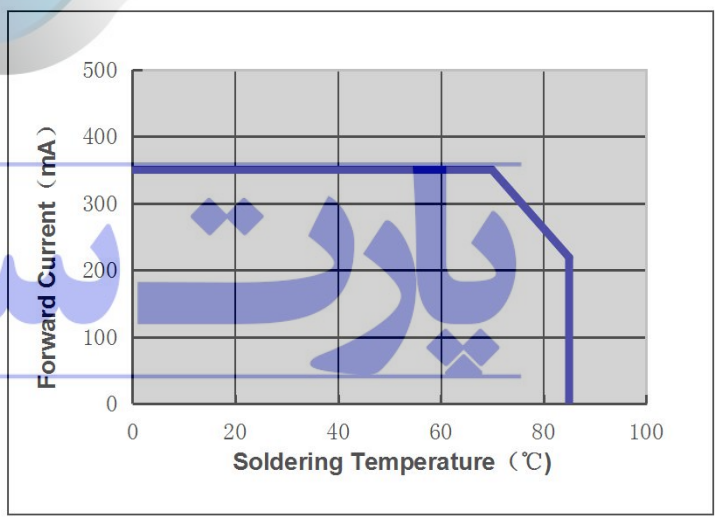

4. 可靠性 Reliability

4-1. 测试项目和测试条件 Testing items and testing conditions

序号 Serial No.	试验项目 Test Item	参考标准 reference standard	试验条件 Test condition	样品数量 Sample Quantity	失效数量 Failure Quantity
1	高低温冲击 Thermal shock	JESD22-A104E	(-40℃15min)-----+120℃(15min), ↑ ↓ 10 sec,200cycles	22pcs	0
2	高温存放 HighTemperature Storage	JESD22-A103D	+100℃，1000h	22pcs	0
3	低温存放 Low Temperature Storage	JESD22-A119	-40℃，1000h	22pcs	0
4	高温高湿老化High Temperature, High Humidity, Aging Test	JESD22-A101C	T=+85℃,RH=85% IF=350MA 1000h	22pcs	0
5	高温使用寿命 High-temperature operation	IES LM80-2015	T=+105℃, IF=350MA 1000h	22pcs	0
6	低温使用寿命 Low temperature operation	JESD22-A108D	T=-40℃, IF=350MA 1000h	22pcs	0
7	回流焊湿度敏感实验 Moisture/Reflow Sensitivity Test	J-STD-020E	Precondition: 60℃.60%RH.168H Tsld=205℃.10sec. 3 Reflows	22pcs	0

FINAL

4-2失效判定标准 Failure criteria

项目Test Items	测试条件Test Condition	判定标准Criteria For Judgement	
		Min. 最小	Max. 最大
正向电压 Forward Voltage	IF=350MA	/	U.S.L*)x1.1
反向电流 Reverse Current	=5V	/	U.S.L*)x2.0
光通量 Luminous Flux	IF=350MA	L.S.L*)x0.7	/

پارت سازان

5.包装规格 Packing specification

5.1铝箔袋标签 Aluminum foil bag label

深圳市同一方光电有限公司
TONGYIFANG OPTOELECTRONIC CO.,LTD.
产品型号：X-XX-XX-XX-XX-XXXX-X
生产单号：XXXXXXX
光 通 量：XXX-XXXLM 芯片：XXX
色 温：XXXX-XXXXK 色区：XXX
电 流：XXXMA 电压：XX-XXV
显 指：XXRA 数量：XXXXPCS
日 期：XXXX-XX-XX 业务：XXX

标签说明 LabelIntro:	型号 Model	芯片 Chip
	光通量 LM	电压 VF
	色温 CCT	电流 IF
	显指 RA	色区 Color BIN
	单号 Order No.	数量 Quantity
	日期 Date	备注 Explain

5.2吸塑盒包装 Blister box packaging。(单位:毫米Units:mm)

产品按照规定方向放置在吸塑盒凹槽里,上面盖上透明的防护塑料盖子,避免产品胶面受外力挤压。每盘吸塑盒放置的数量根据客户需要分为1-50PCS不等（吸塑盒外观标准尺寸为146.0*148.5*9.5mm)，如图所示，包装好的材料放置在纸箱中用透明胶带封好。

The product is packed in fluted plastic box with protection cover, preventing from ourside force.1-50pcs in one plastic box according to different requirements from customers(Outside demension of the plastice box is 146.0*148.5*9.5mm). Packed plastic box will be stored in carton and sealed,which is showed as the picture.

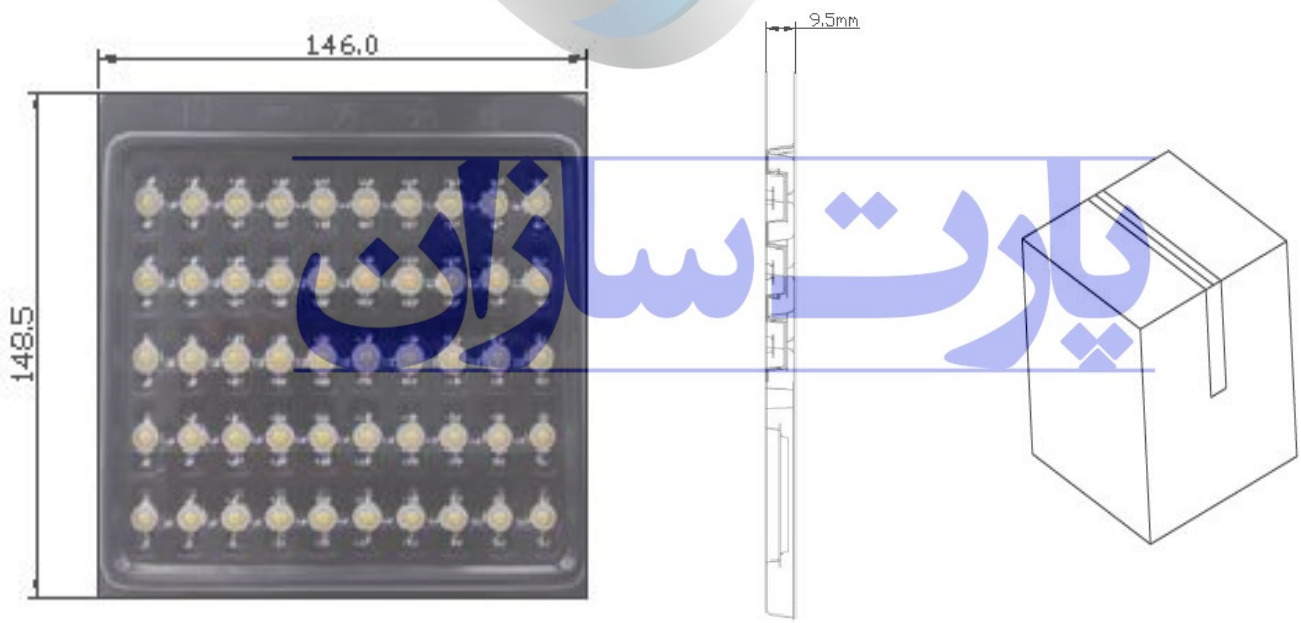

FINAL

5.3卷盘包装 Reel packaging 。(单位:毫米Units:mm)

将LED放置在编带中，卷轴包装 Place the LED at belt, reel packaging 。

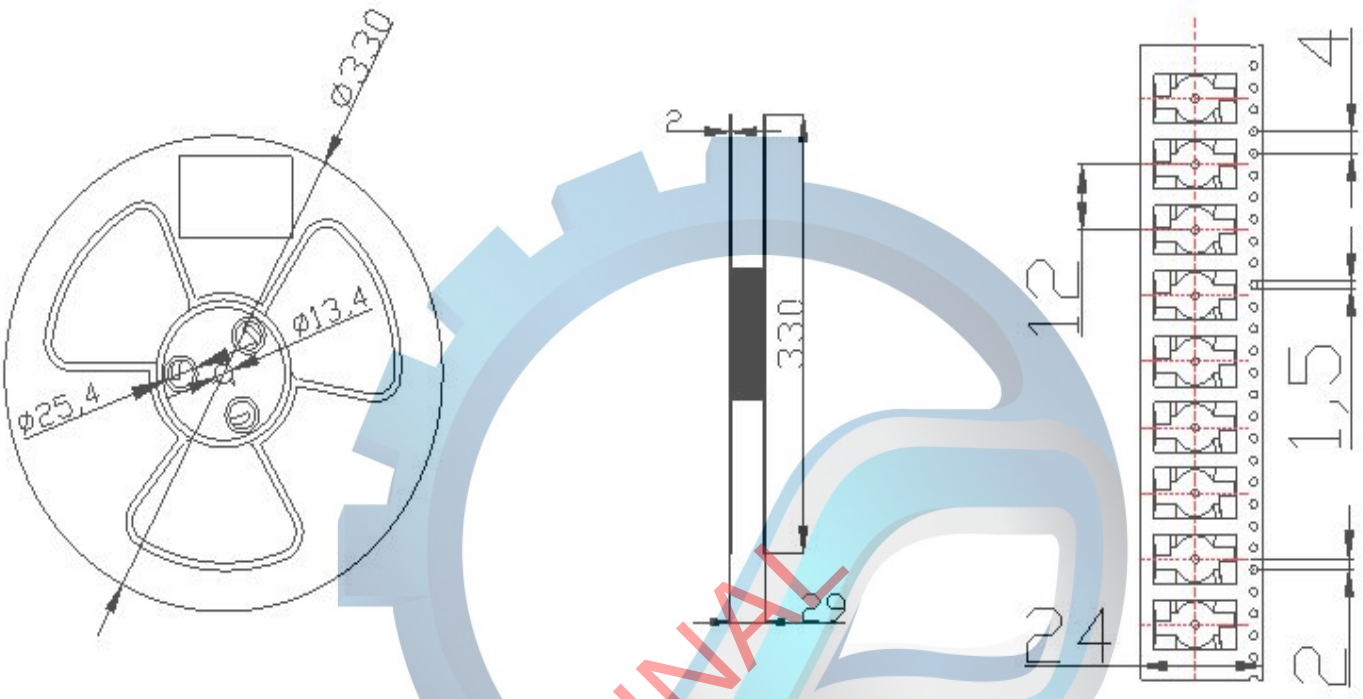

LED编带后放置在铝箔袋中真空包装，内置湿度卡。在装带之后纸箱包装. The LED are packed in card board boxes after taping.

5.4根据客户需要使用料管包装 According to the customer need to use the feed tube packing.

5.5请注意防水防潮 . Keep away from water, moisture in order to protect the LEDs.

5.6须采取适当防护措施,以防包装箱跌落或受到强力撞击造成对产品的损伤.

The LEDS may be damaged if the boxes are dropped or receive a strong impact . so precautions must be taken to prevent any damage.

6.使用注意事项 Caution

6.1储藏条件 Storage conditions

打开前:温度为5~30℃，相对湿度低于60%。（打开后模组应在24H之内使用完毕），如未用完之产品，请进行除湿并抽真空后密封保存。湿度卡变色或包装袋漏气等现象必须除湿，除湿条件：60°C±5°C，24H。产品密封保存有效使用期为3个月。

Open front: temperature is 5 ~ 30 ℃, relative humidity below 60%.(the module should be used within 24H after opening). If the product is not used up, please dehumidify it and keep it sealed after vacuuming.Humidity card phenomenon such as discoloration or bags leak must dehumidifier, dehumidifier conditions: 60 ° C + / - 5 ° C, 24 h.The product seal is kept for 3 months.

6.2取放条件 Attention：

取放及组装过程禁止挤压发光区胶体表面，注意SMT贴装吸嘴选择，防止压死灯现象。

During use and assembly,please do not press light-emitting colloid surface, pay attention to the choice of suction nozzle SMT , to prevent chip die.

6.3静电防护Electrostatic protection。

LED属于I级静电敏感器件，接触、使用过程做好防静电保护。

LED belong to grade I electrostatic sensitive device, please do ESD protection when touch and use.

6.4清洁条件 Clean condition

LED胶体表面脏污，可用酒精清洗，不可用丙酮等腐蚀性的清洗溶剂清洗。

If LED colloid surface dirt, use alcohol to clean.Can't use acetone or corrosive to clean.

FINAL
پارت سازان

6.5焊接条件Welding conditions。

高温透镜和Molding硅胶LED可用加热台或回流焊机焊接。加热台焊接：≤200℃，熔锡后3-6秒内取出， 最多可焊接2次，自然降温到室温，方可包装。回流焊接如图：

High temperature LED lens and Molding silicone Heating units or reflow welding machine are available to weld.Heat welding machine: 200 ℃ or less and molten tin, 3-6 seconds after maximum welding 2 times, natural cooling to room temperature, before packing.Reflow soldering is shown in figure:

预热温度	无铅
	120-150℃
预热时间	＜120S秒
峰值温度	＜205℃
峰值温度焊接时间	＜10秒

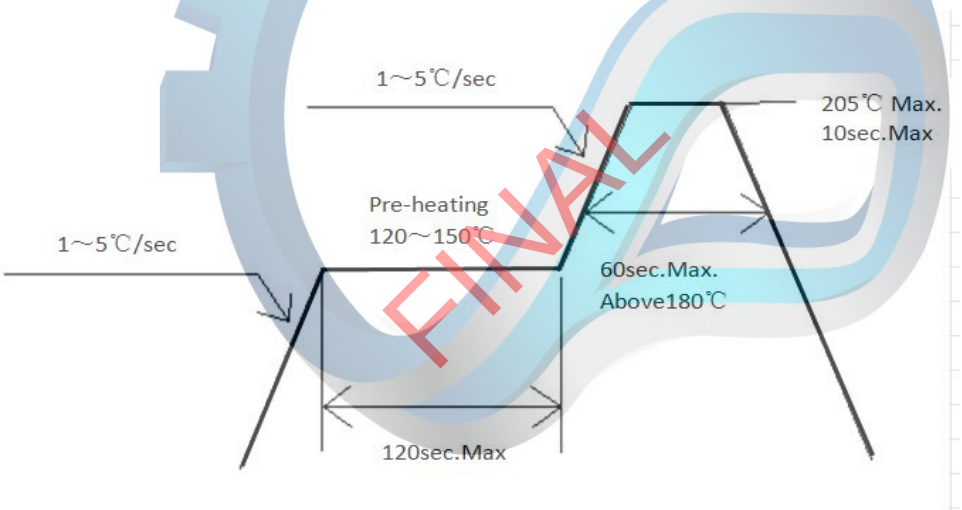

说明：1.最多只可回焊两次,且在首次回焊后须冷却至室温之后方可进行第二次回焊. LEDS can be welded twice at most,it can be welded again only after the LEDS are cooled as room temparature. 2.常规PC透镜灯珠用导热膏（导热系数1.0-4.0MK/W左右）与散热体连接，灯珠两个引脚用恒温电烙铁焊接，焊接引线温度控制在350℃，时间3-5S内。常温透镜产品不适合回流焊，如果温度超过150℃，透镜会变形，影响产品性能。

Thermal conductive paste(Thermal Conductivity 1.0-4.0MK/W) should be used when connect the high power led with normal PC lens to the radiator; two pins of leds shall be welded by thermostat soldering iron. Make sure that the welding temperature is under 350 ℃ and welding time in 3-5 Seconds.Normal lens products are not suitable for reflow soldering, If the temperature over 150 ℃, the lens will deformation, affect product performance.

6.6灯珠检测 The electrical test

单颗灯珠电压不能高于5V,灯珠有正负方向，焊反则不能正常点亮。Unit chip voltage can not higher than 5 v, chip has positive and negative pad,the chip can not light up if weld wrong.

6.7电路及散热设计 Design of circuit and heat dissipation

（1）.产品正常工作温度：TS点（负极焊盘）小于75℃，如果超出我司给定要求，客户必须做产品可靠性评估，风险由客户承担。Normal operating temperature: TS point (negative pad) is less than 75 ℃, if exceeded, customer needs to make reliability assessment, customer takes the risk.

（2）.电源驱动选取：本产品需使用恒流源进行驱动，且输出电流符合规格书上的功率使用范围，如需使用恒压源或其他使用条件，请进行使用效果风险评估。 Power Supply Select: This product is powered by using a constant current driver, and the output current of the power range meets the requirement of specifications book, if use constant voltage source or other conditions, please do risk assessment.

6.8使用环境要求 Environmental requirements

此产品设计不针对下列任何条件，如在下列任何条件下使用产品，请确定其正常性能和可靠性；
如：潮湿，有露水凝霜，盐水空气，腐蚀性气体的地方（CL,H2S,NH3,SO2,NOX,等）；太阳直晒下，户外暴露，多灰尘的地方。水中，油，医用液体和有机溶剂等。This product can not use under below situations, if use the product in any of the below conditions,please make sure the performance and reliability;Such as: wet , frost, salt air, corrosive gases (C1, H2S, where NH3, SO2, NOX); Exposure under the sun, exposure outdoor, dusty. Water, oil,liquid medical and organic solvent.

7其他注意事项 Other Instructions：

7.1使用兼容性 Using Compatibility

灯具中气体的化学成分以及光源周围的环境对灯具的寿命至关重要，特别是当您选择在灯具设计中使用化学成分时尤为重要。考虑使用任何材料之前，务必先咨询产品供应商或LED制造商。使用某种材料前获取的信息越多，灯具寿命期内的性能越高。 The chemical composition of gas in lamps and surrounding environment of light source are essential to the life of the lamps, especially when you choose to use chemical composition, it is particularly important in lighting design. Before considering the use of any material, be sure to consult the product supplier or LED manufacturer. The more information obtained before using some material, the higher the performance of the lamp.

7.2产品色差问题 Color difference matters needing attention

不同BIN的LED光电参数有差异，使用前，须仔细评估The different Bin led has different photoelectric data,before use, please assess carefully。

7.3具体使用注意事项参考《点光源产品使用注意事项》Specific please check the <<Notice of the point light source products>> for reference。